FRM-201

48V MONOPOINT

DESCRIPTION

The Spotlight 201 is a compact and versatile ceiling-mounted fixture. With 500 lumens, CRI 90+, and beam angles of 24° and 36°, it's perfect for various indoor applications. Available in multiple color temperatures and dimming options, it combines performance and style in a sleek black finish.

FREEPOINT FEATURES

Compact Design
1 5/8" x 2 3/4" for discreet ceiling installations
High Luminous Flux
Delivers 500 lumens with an efficacy of 83 LM/W
High Color Rendering Index
CRI of 90+ ensures accurate color representation
Versatile Color Temperatures
Available in 2700K, 3000K, 3500K, and 4000K
Advanced Dimming and Controls
Compatible with 0-10V, DALI-2, TUYA, and CASAMBI systems
Wide Beam Angle Options
Offered in 24° and 36° for focused or broader lighting
Low Glare
UGR <10 for comfortable and effective lighting

SPECIFICATIONS DATA

Lumens	500
Size(s)	Ø 1-5/8" x 3-1/2" L
Efficacy	83 LM/W
Finish(es)	Black
Driver(s)	0-10V, DALI-2, Tuya, CASAMBI
Input Voltage	48V
Beam Angle	24°, 36°
UGR	<10
CRI	>90
CCT	27K, 30K, 35K, 40K
Power (W)	6

TRACK MODULE ORDERING GUIDE

Basic Unit	Beam Angle	Driver	Voltage	Lumens	CCT	CRI	Finish
FRM-201 1-5/8" Spotlight	**24D** 24° Distribution	**DIM10** 0-10V Dimming	**48** 48VDC	**500L** 500 lumens	**27K** 2700K	**90**	**BK** Black Finish, Black Housing
	36D 36° Distribution	**BLE-CASAMBI** Bluetooth Low Energy Casambi			**30K** 3000K		
		DALI-2			**35K** 3500K		
		TUY TUYA			**40K** 4000K		

All rights reserved. © Edison Price Lighting 2025
Due to continuous product improvements, specifications and dimensions are subject to change without notice.
Consult www.epl.com for most current technical information.

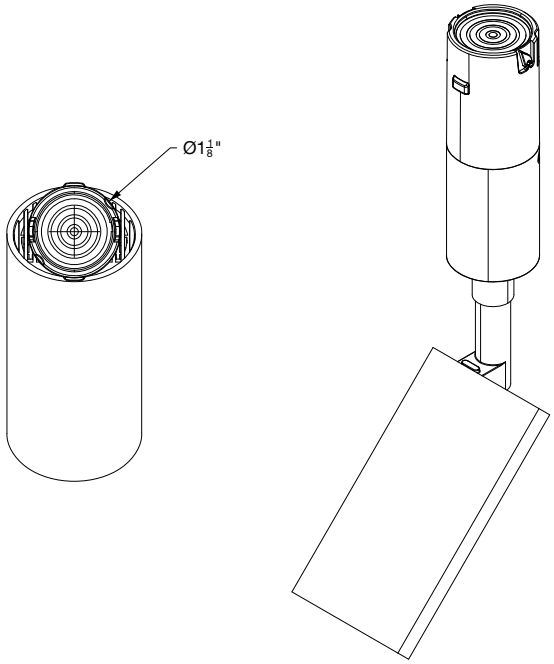

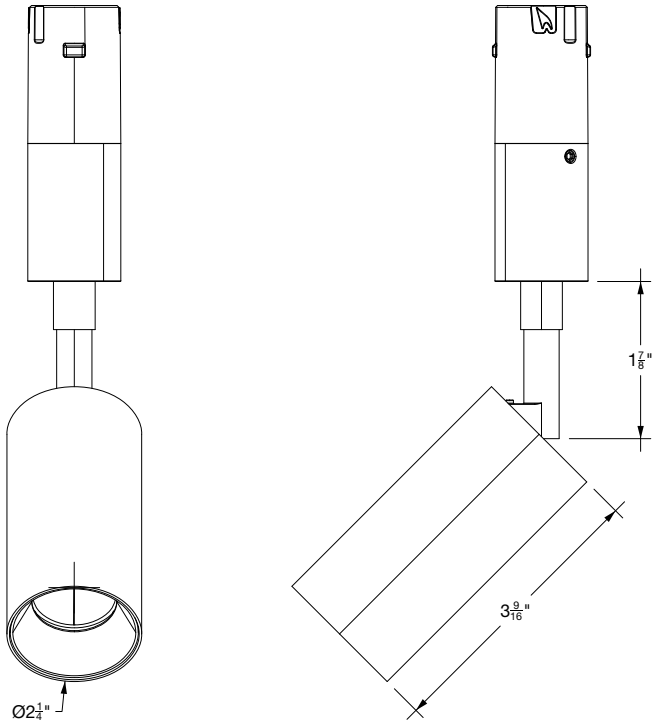

All rights reserved. © Edison Price Lighting 2025
Due to continuous product improvements, specifications and dimensions are subject to change without notice.
Consult www.epl.com for most current technical information.